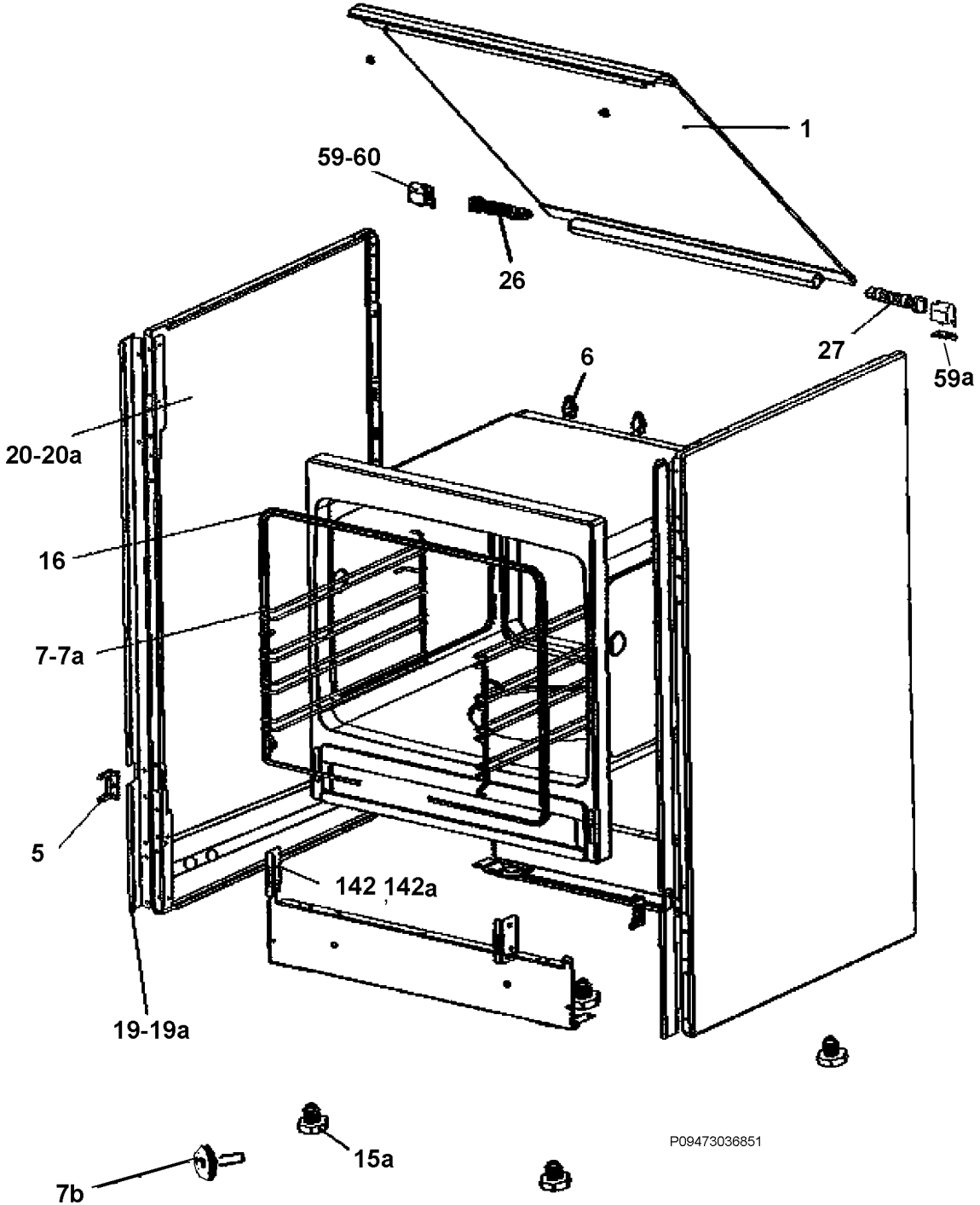
1
59-60
26
27
59a
6
20-20a
16
7-7a
5
142 142a
19-19a
15a
7b
P09473036851

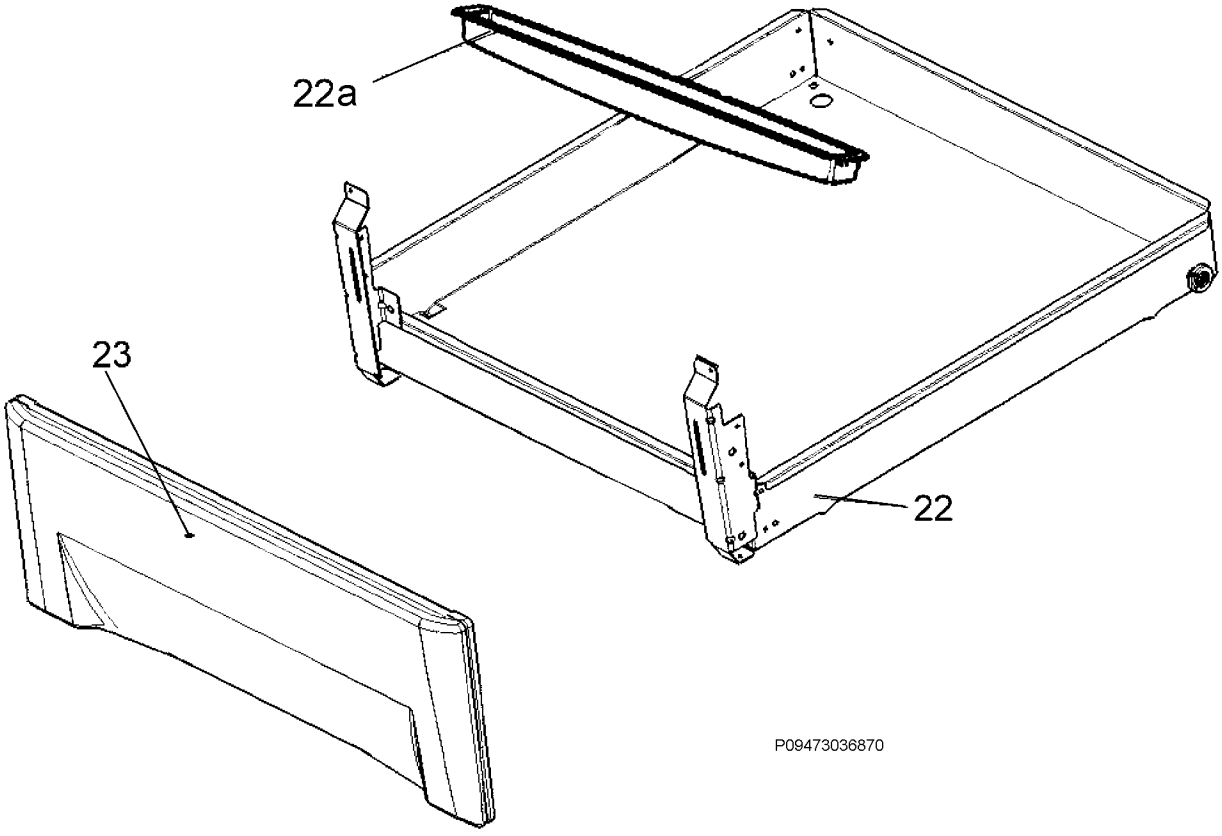
22a
23
22
P09473036870

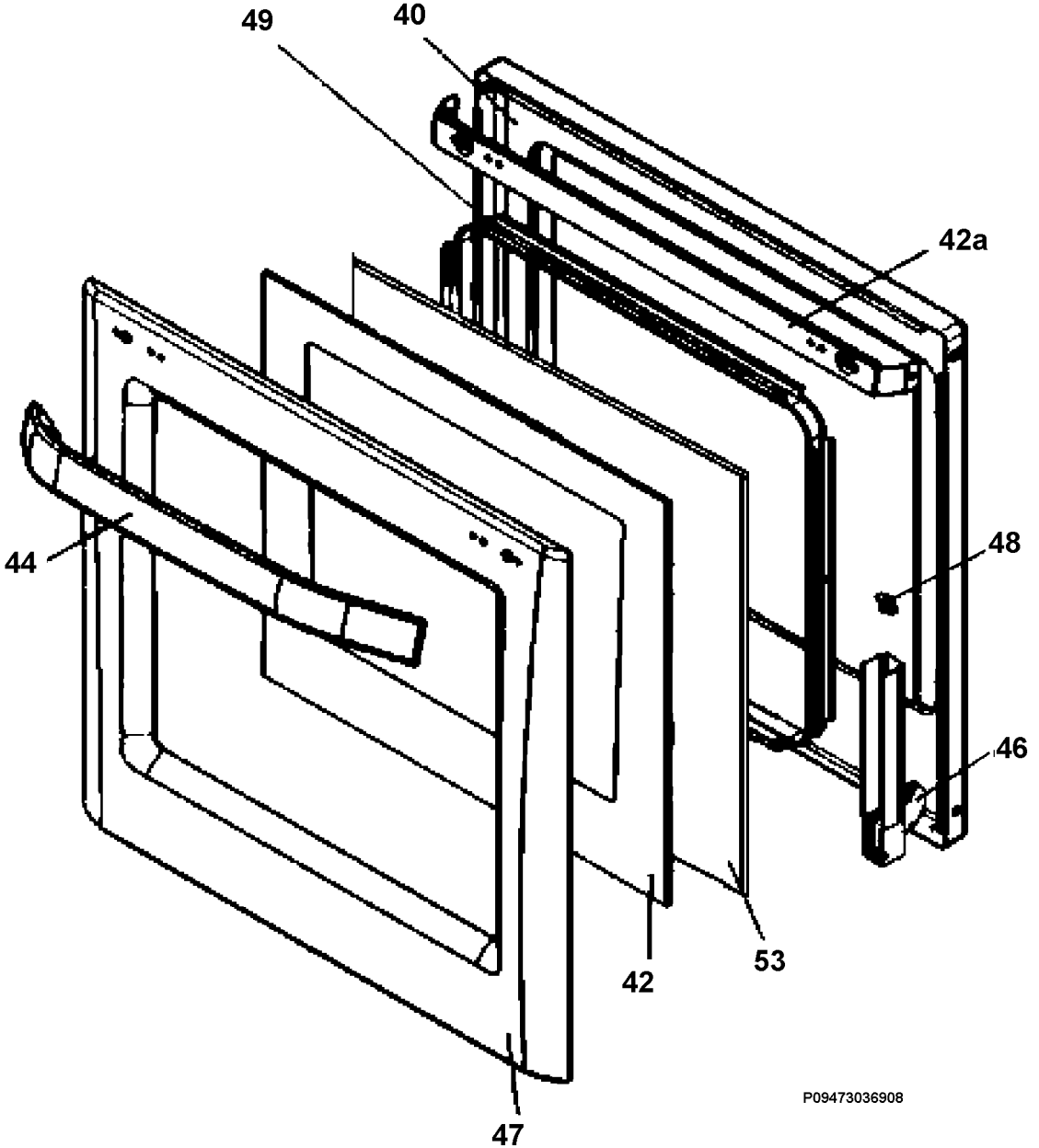
49
40
42a
44
48
46
53
42
47
P09473036908

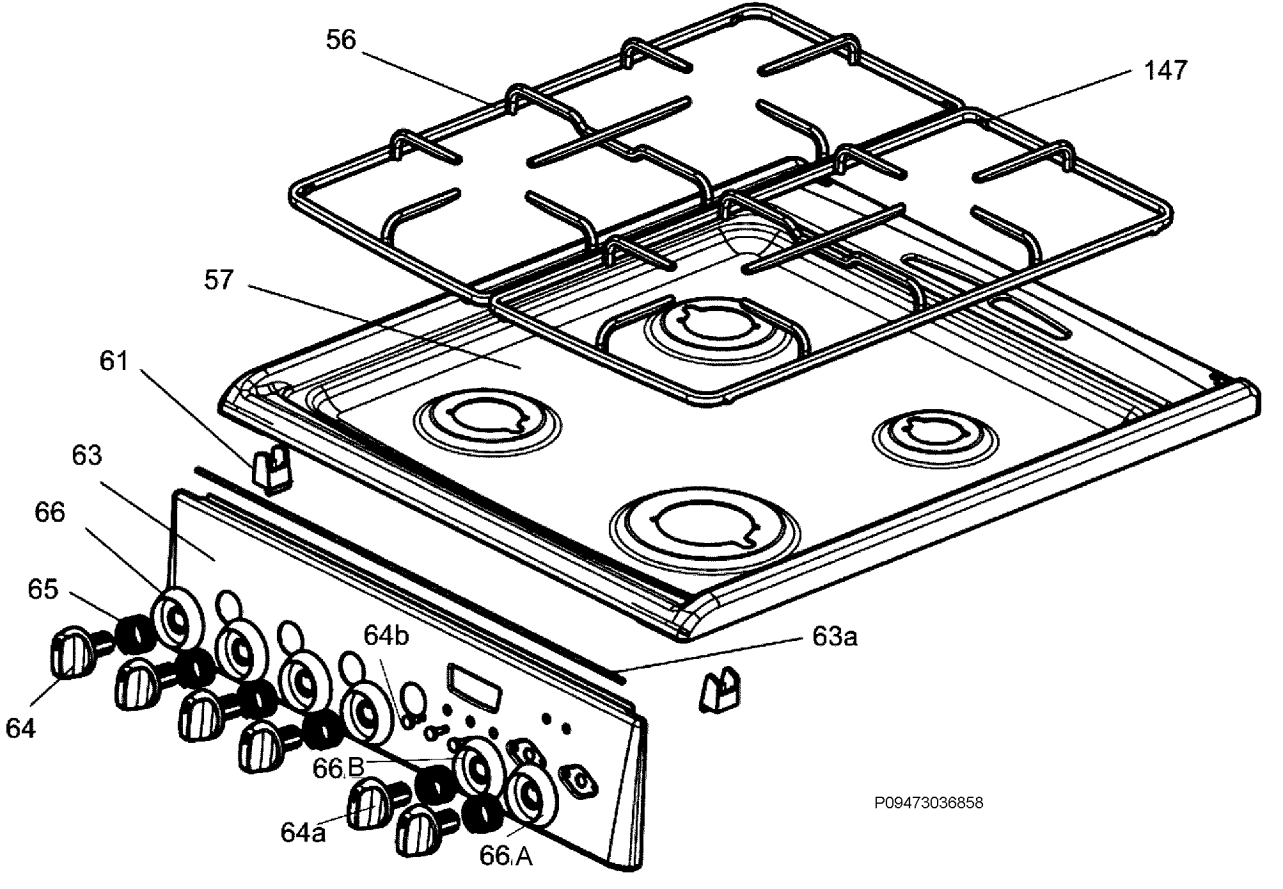
56
147
57
61
63
66
65
64b
63a
64
66.B
64a
66.A
P09473036858

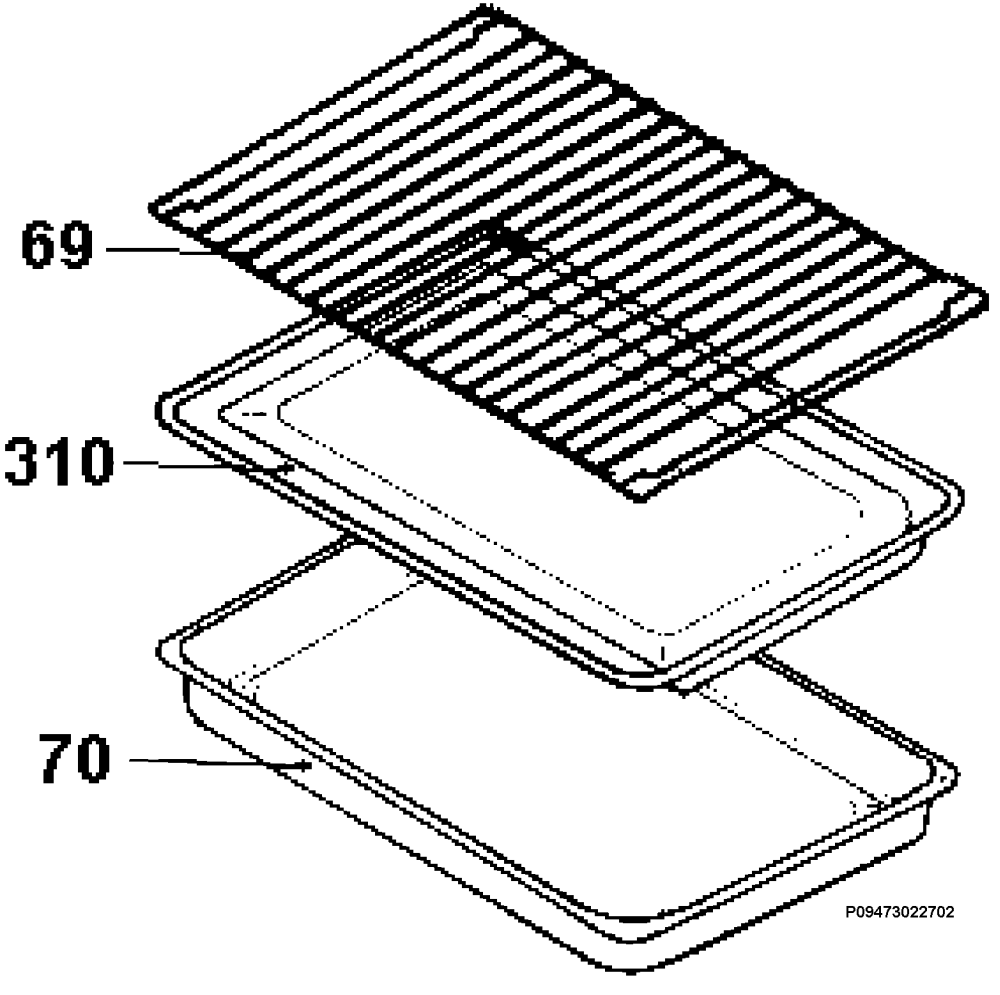
69
310
70
P09473022702

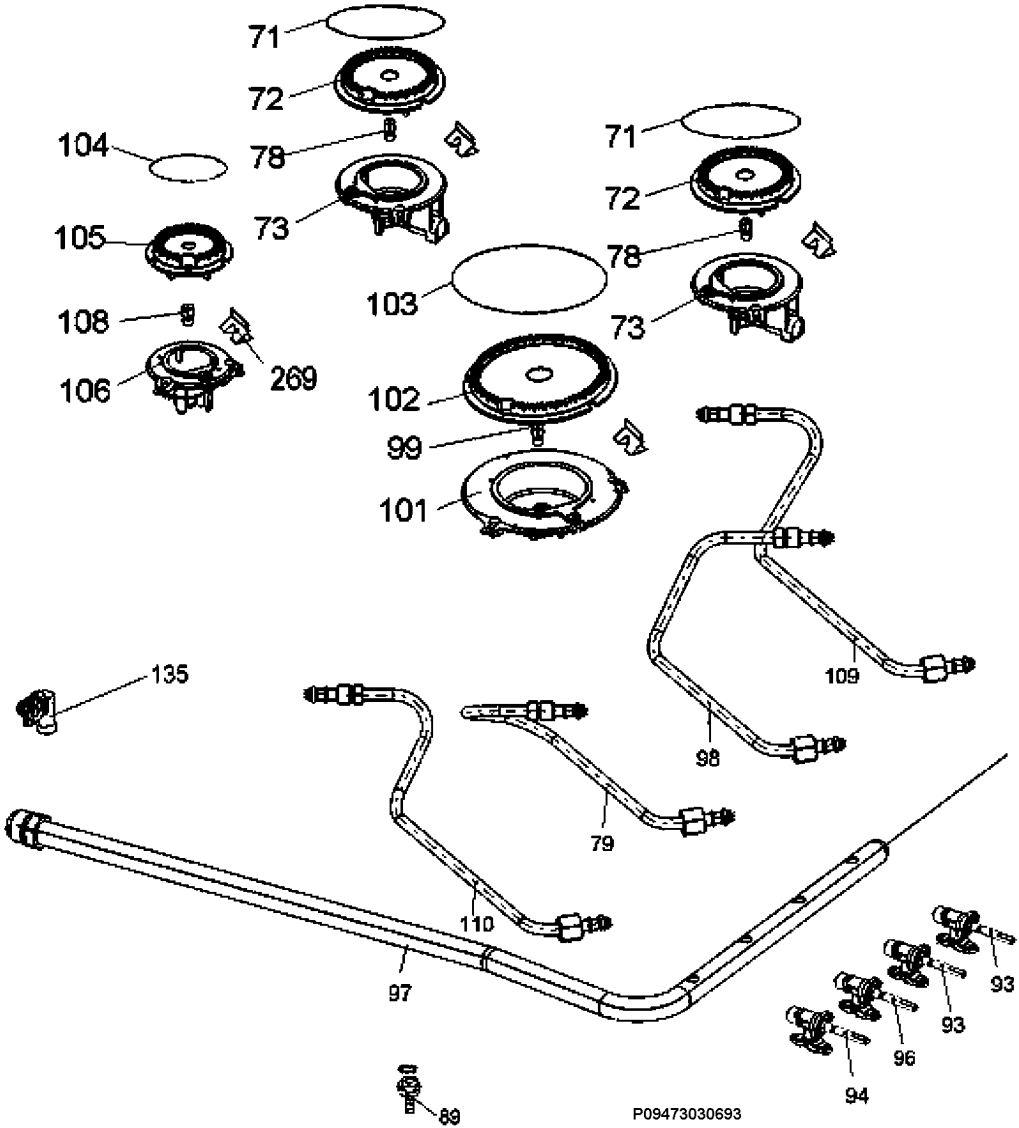
71
72
78
73
104
105
108
106
269
71
72
78
73
103
102
99
101
109
98
135
79
110
97
93
93
96
94
89
P09473030693

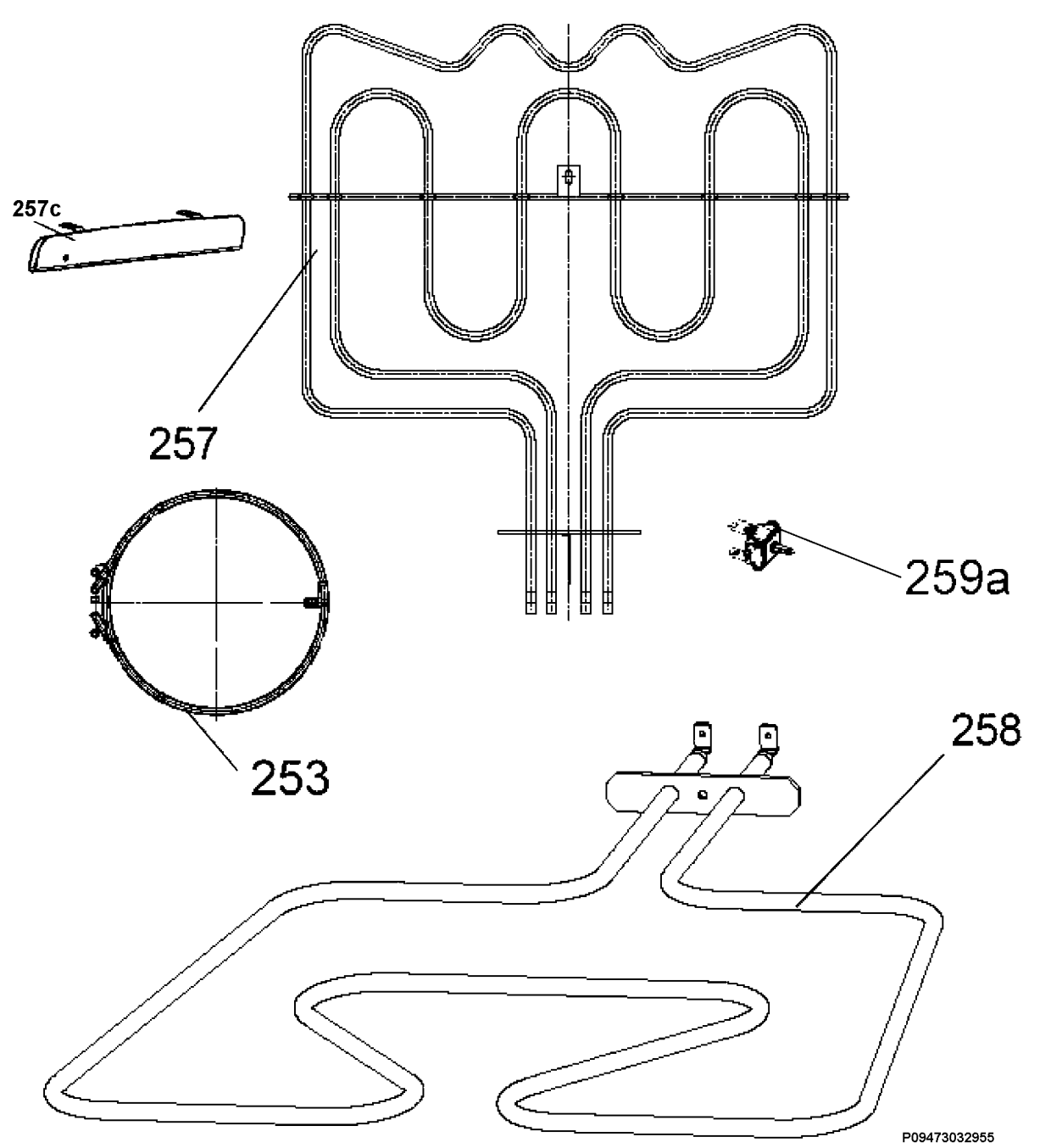
257c
257
259a
253
258
P09473032955

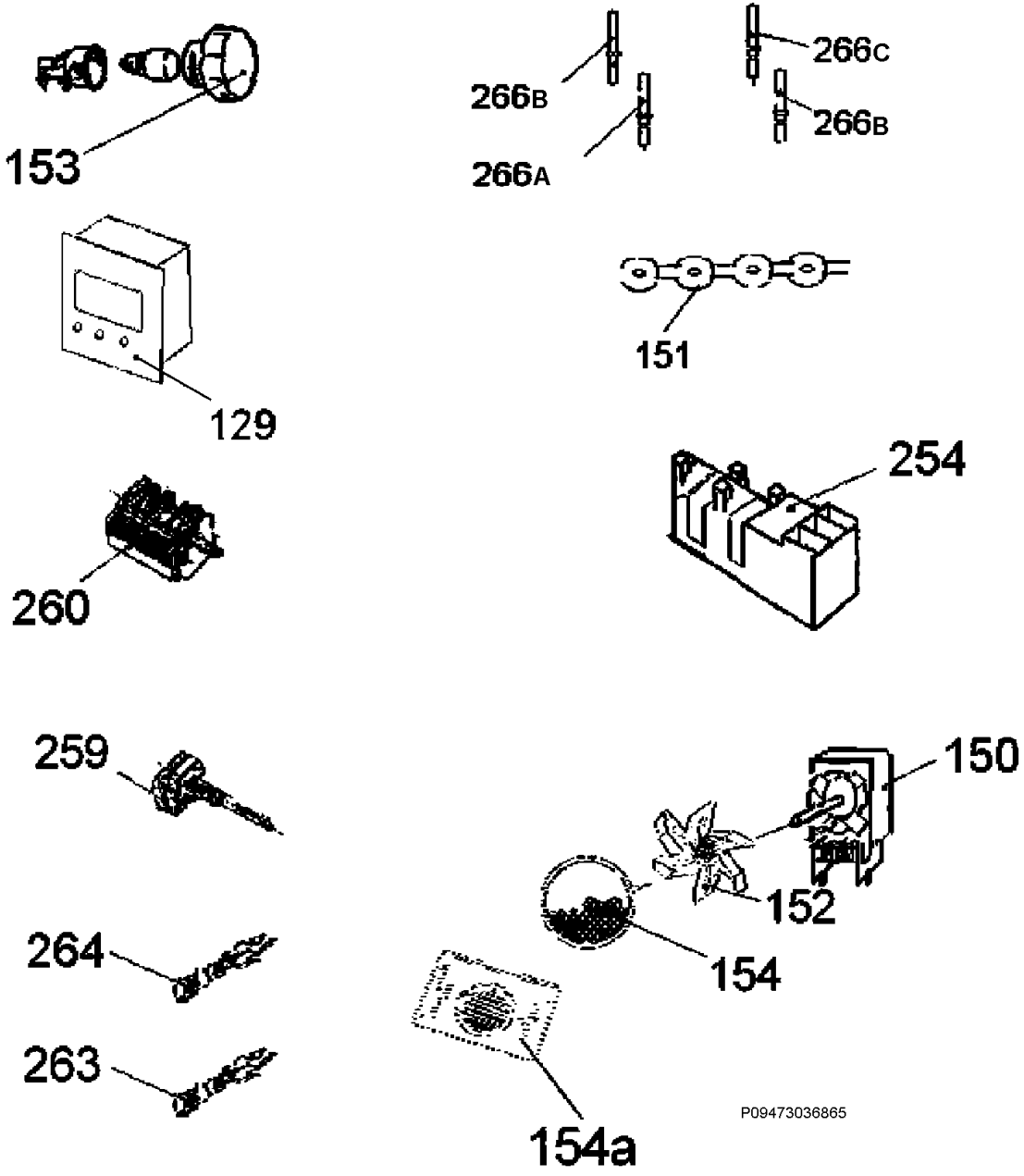
153
266B
266A
266C
266B
129
151
254
260
259
150
152
264
154
263
154a
P09473036865