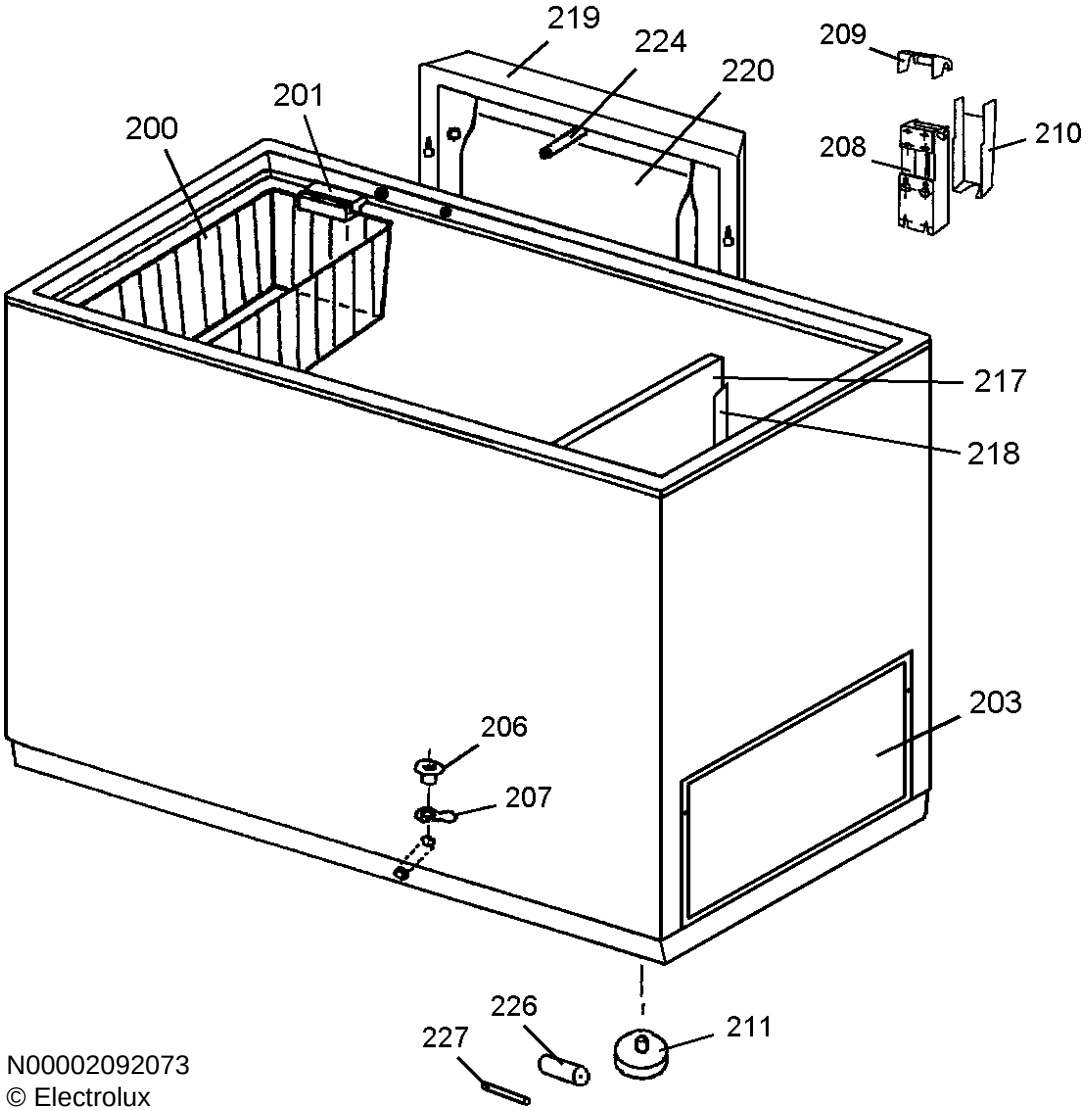

N00002092073
© Electrolux

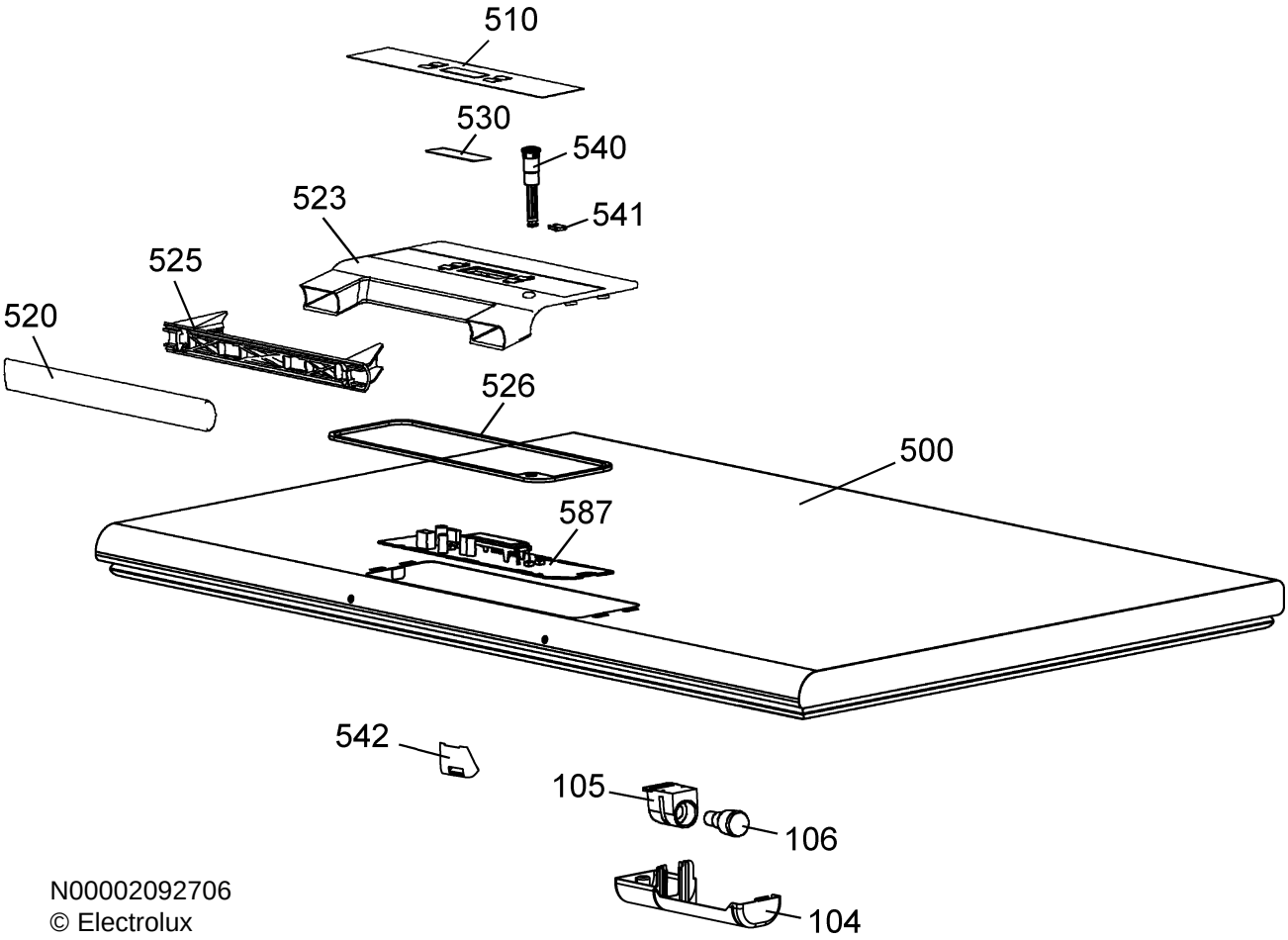

N00002092706
© Electrolux

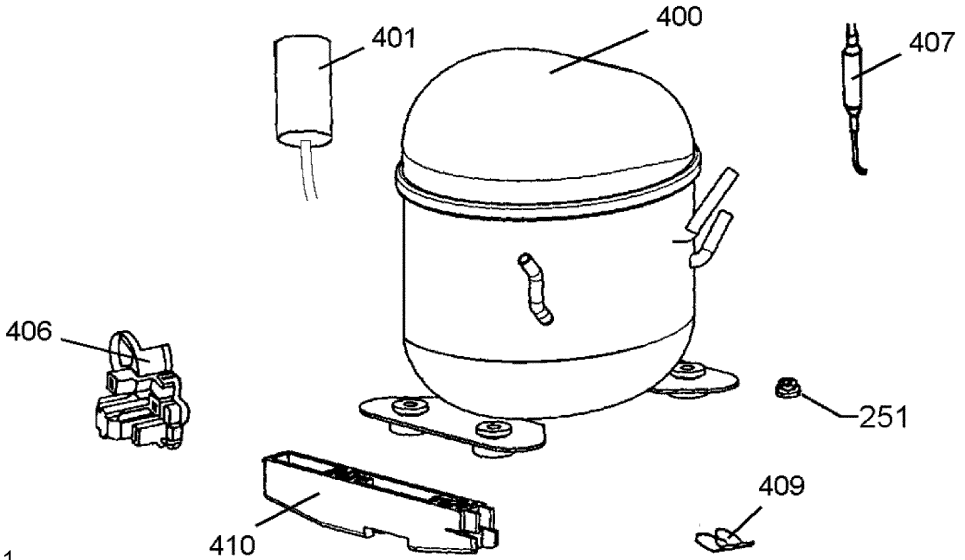

P00003022681

© Electrolux