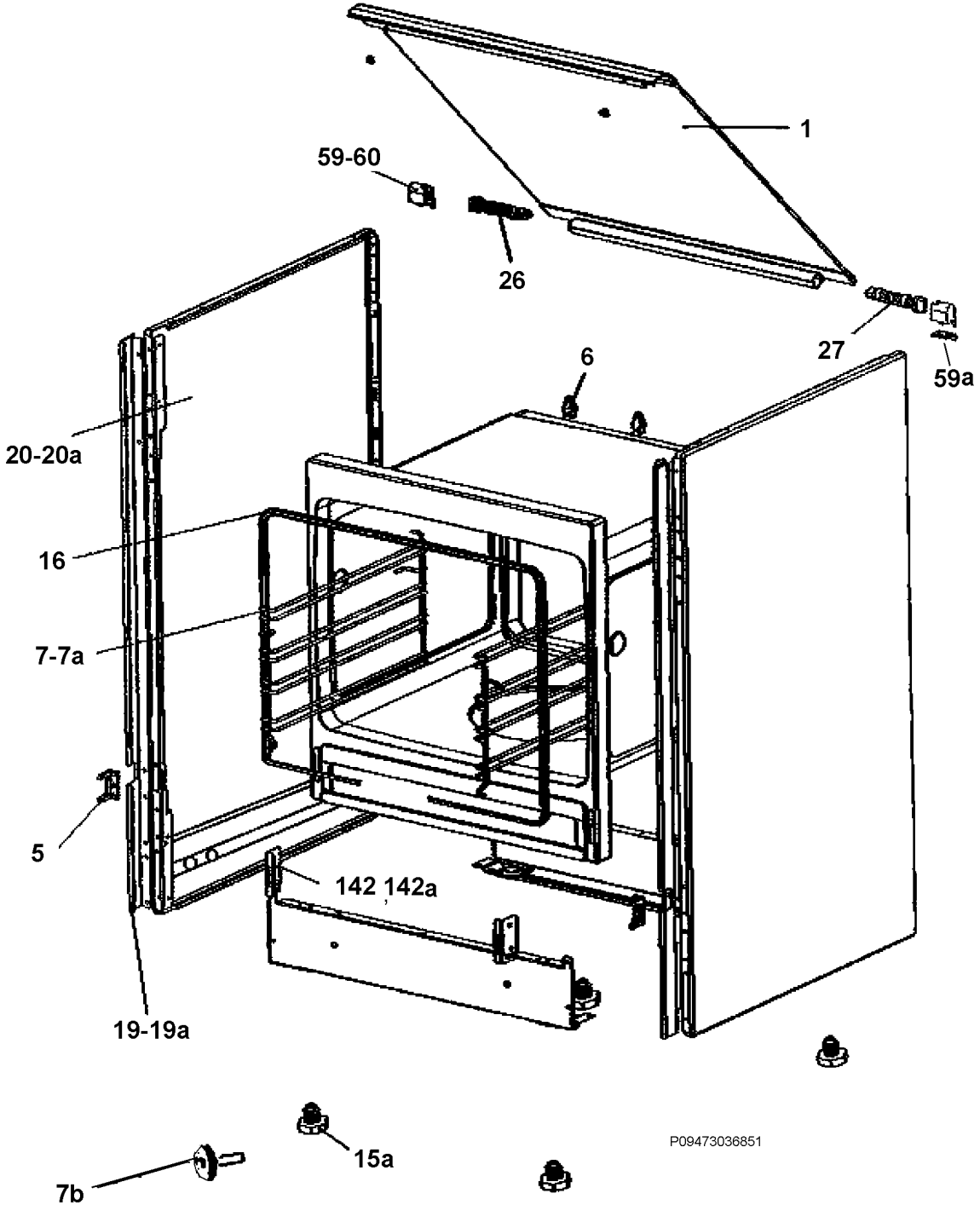
1
59-60
26
27
59a
6
20-20a
16
7-7a
5
142 142a
19-19a
15a
7b
P09473036851

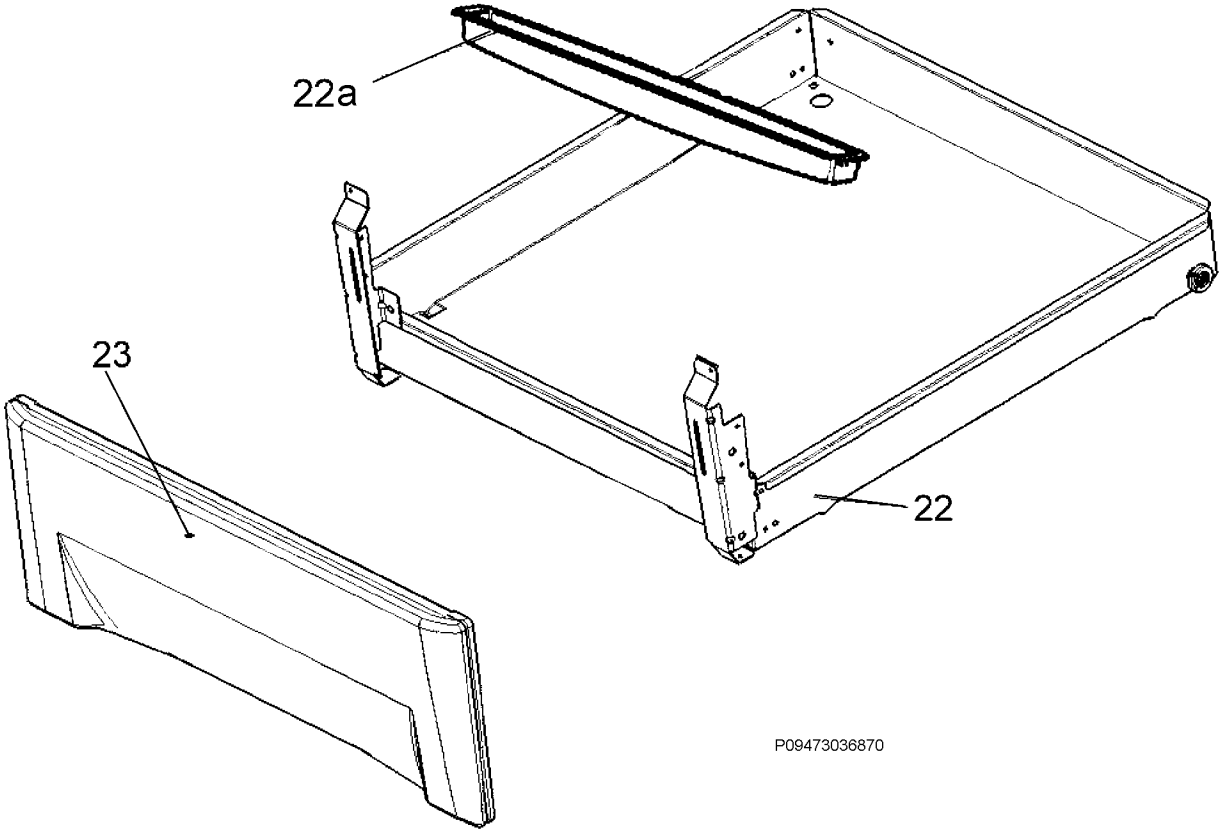
22a
23
22
P09473036870

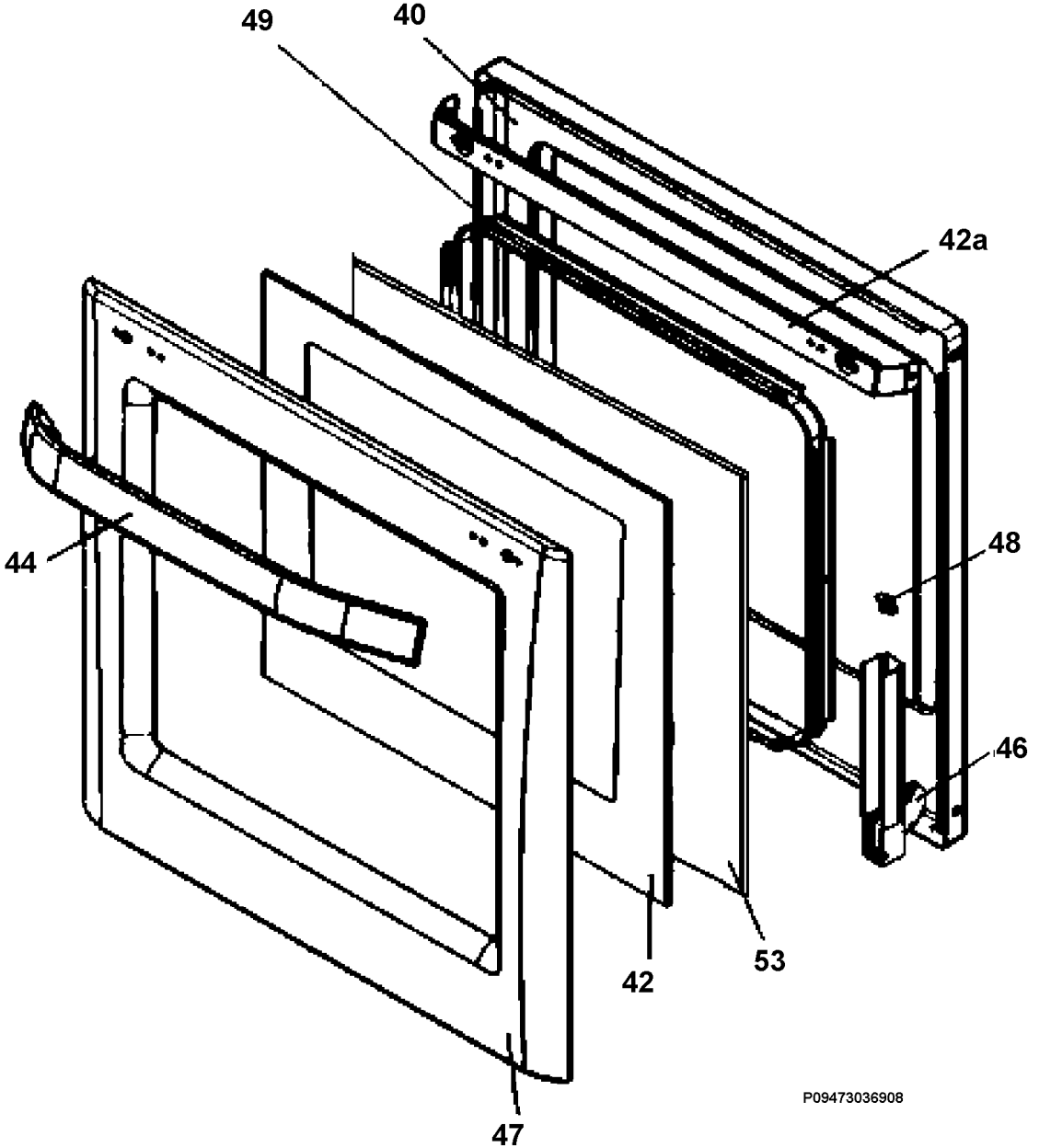
49
40
42a
44
48
46
53
42
47
P09473036908

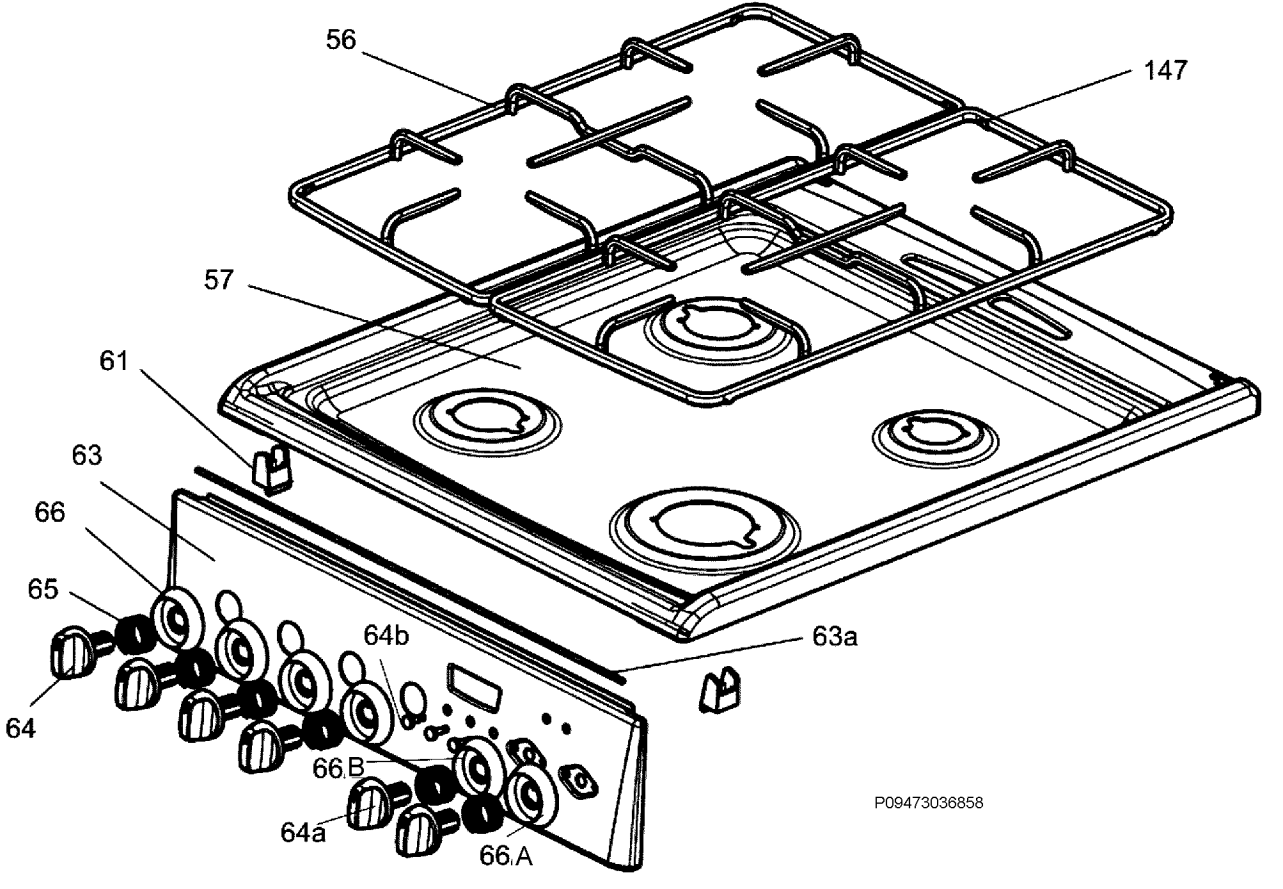
56
147
57
61
63
66
65
64b
63a
64
66.B
64a
66.A
P09473036858

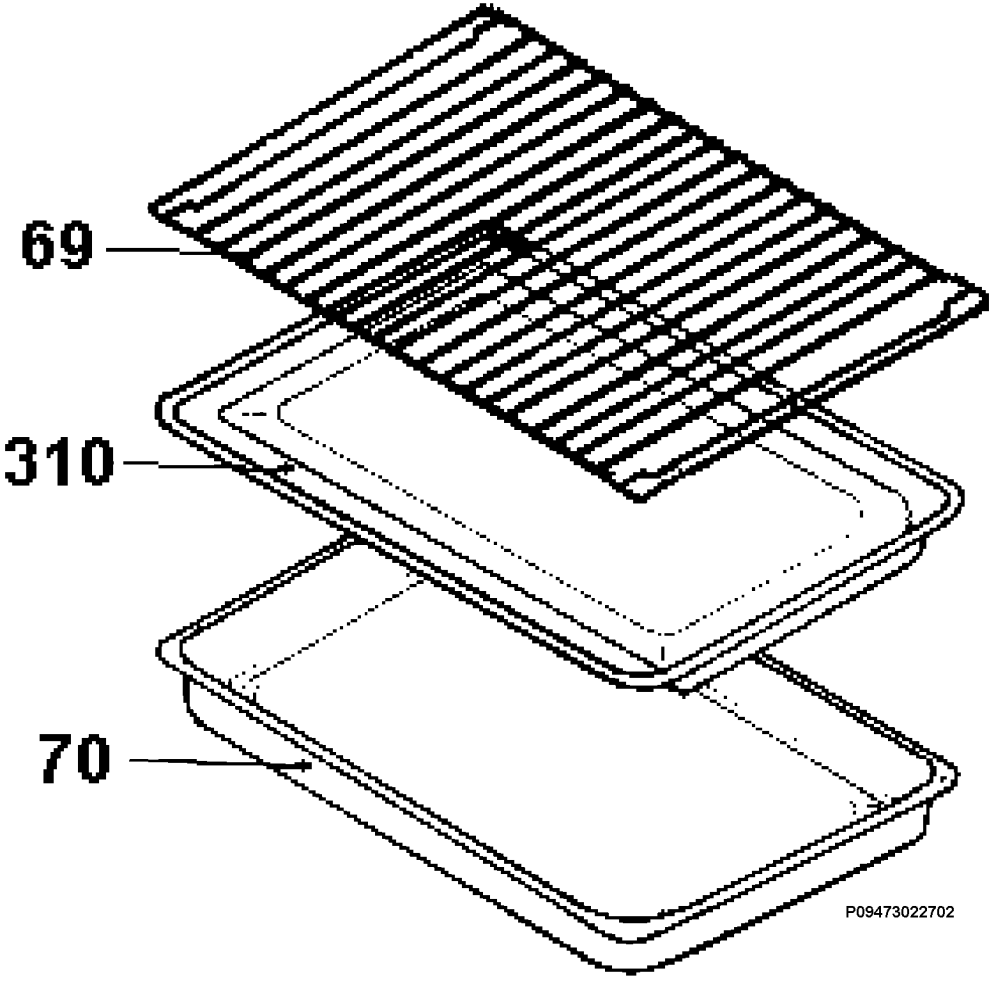
69
310
70
P09473022702

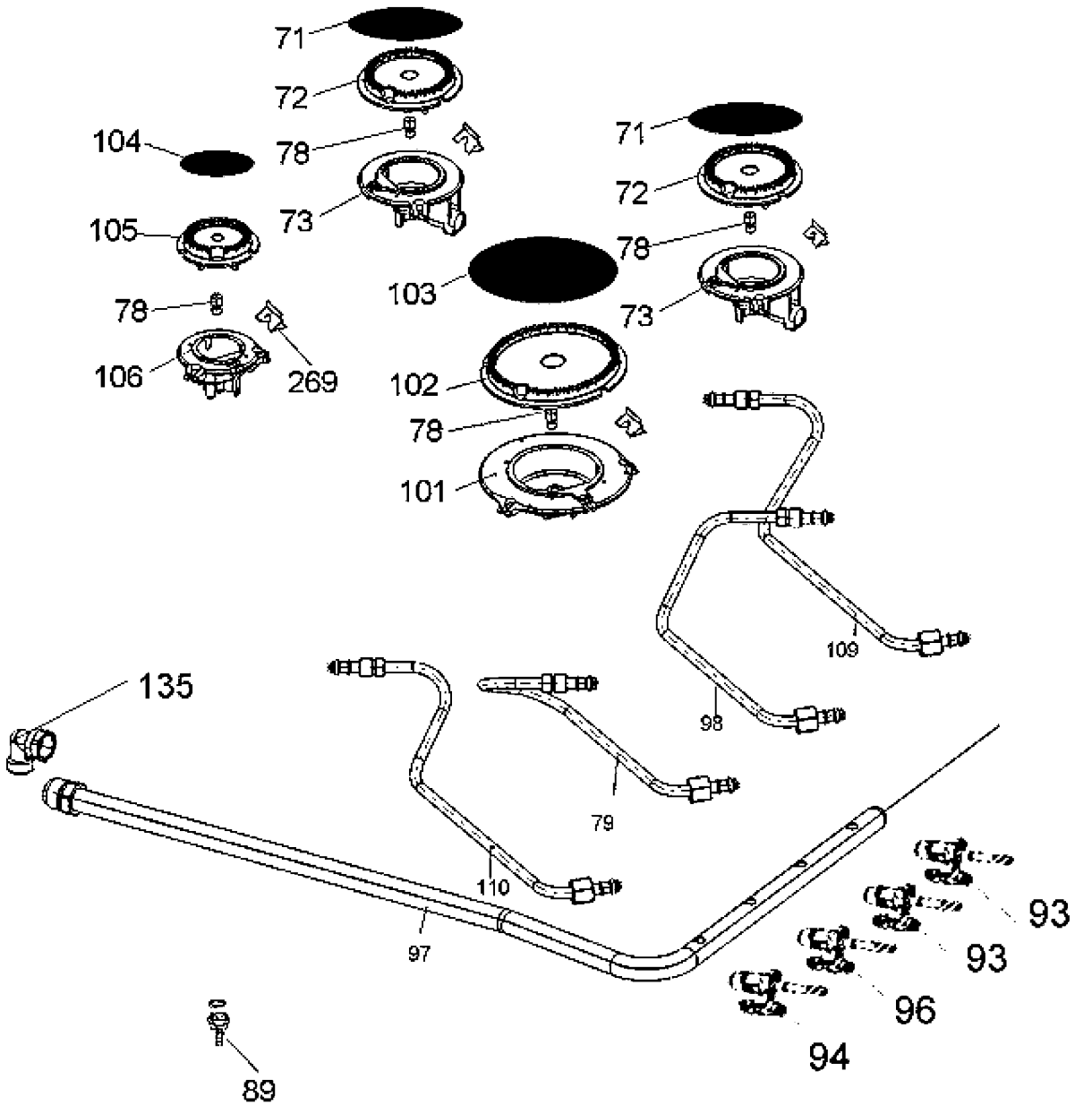

P09473061133

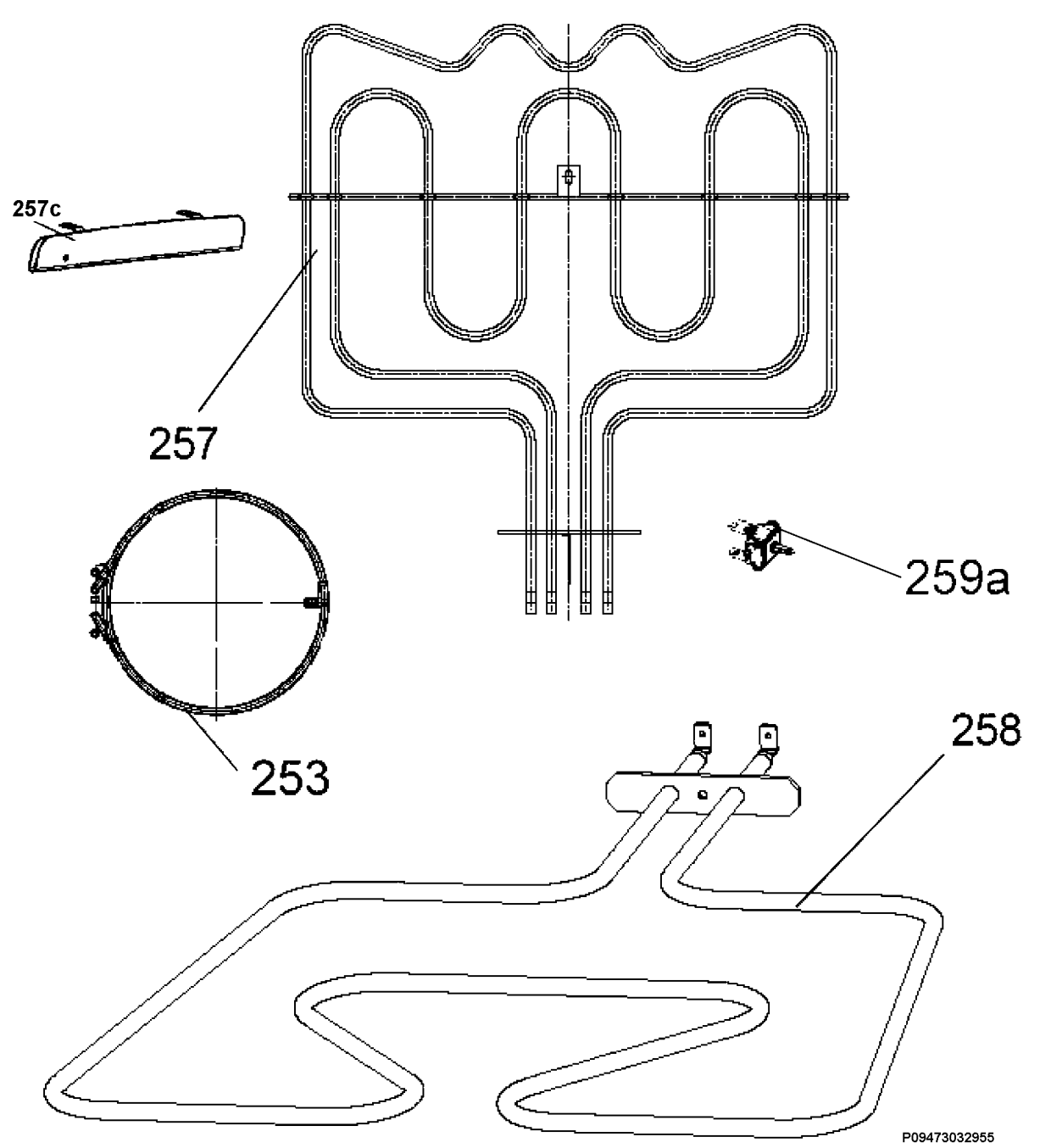
257c
257
259a
253
258
P09473032955

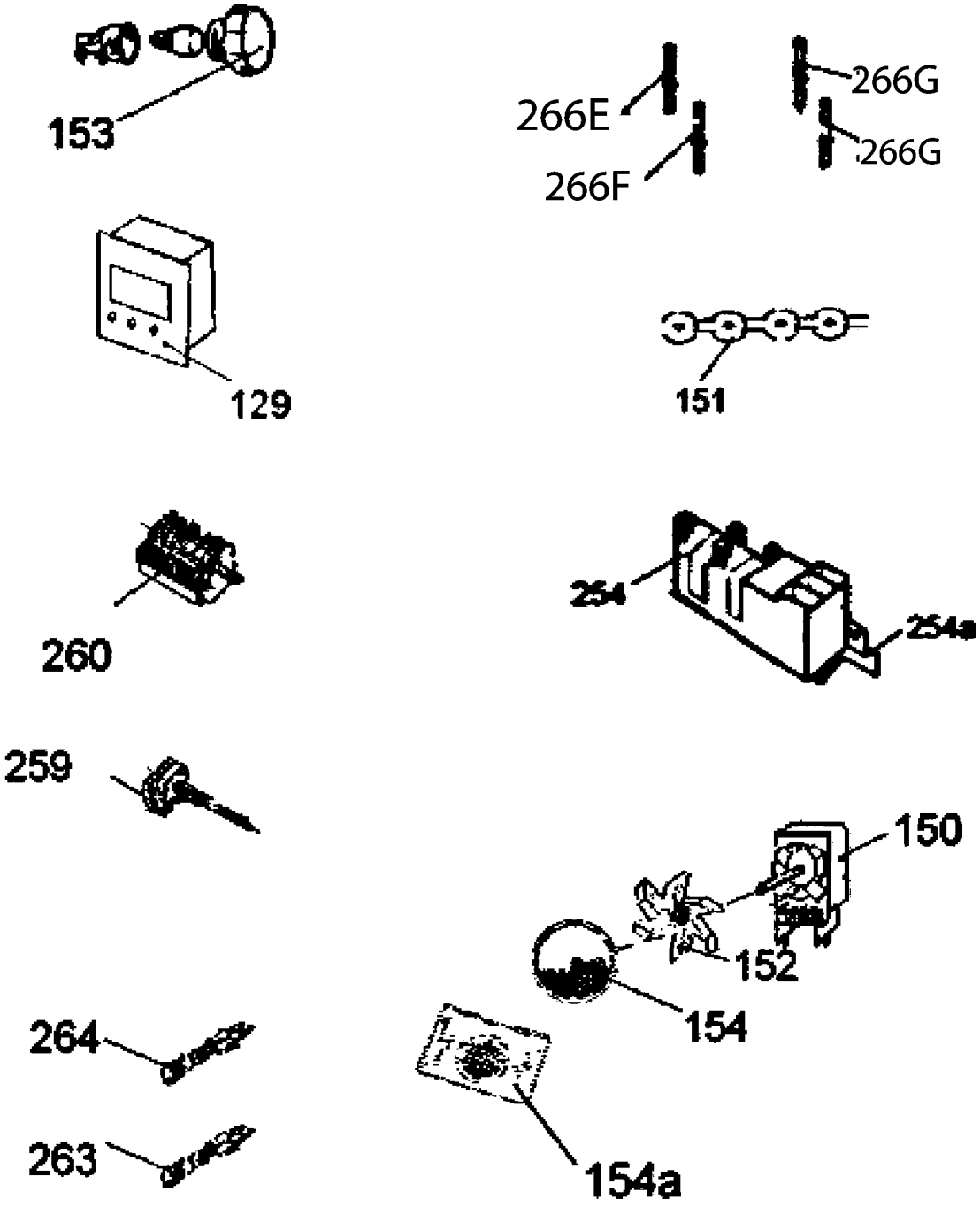

P09473061698